Residential & Commercial



The **Koto™ Peek** Multiples

Single, Double & Triple Head



ELCO Lighting

Innovation Beyond Expectation

Introducing

The **Koto™ Peek** Multiples

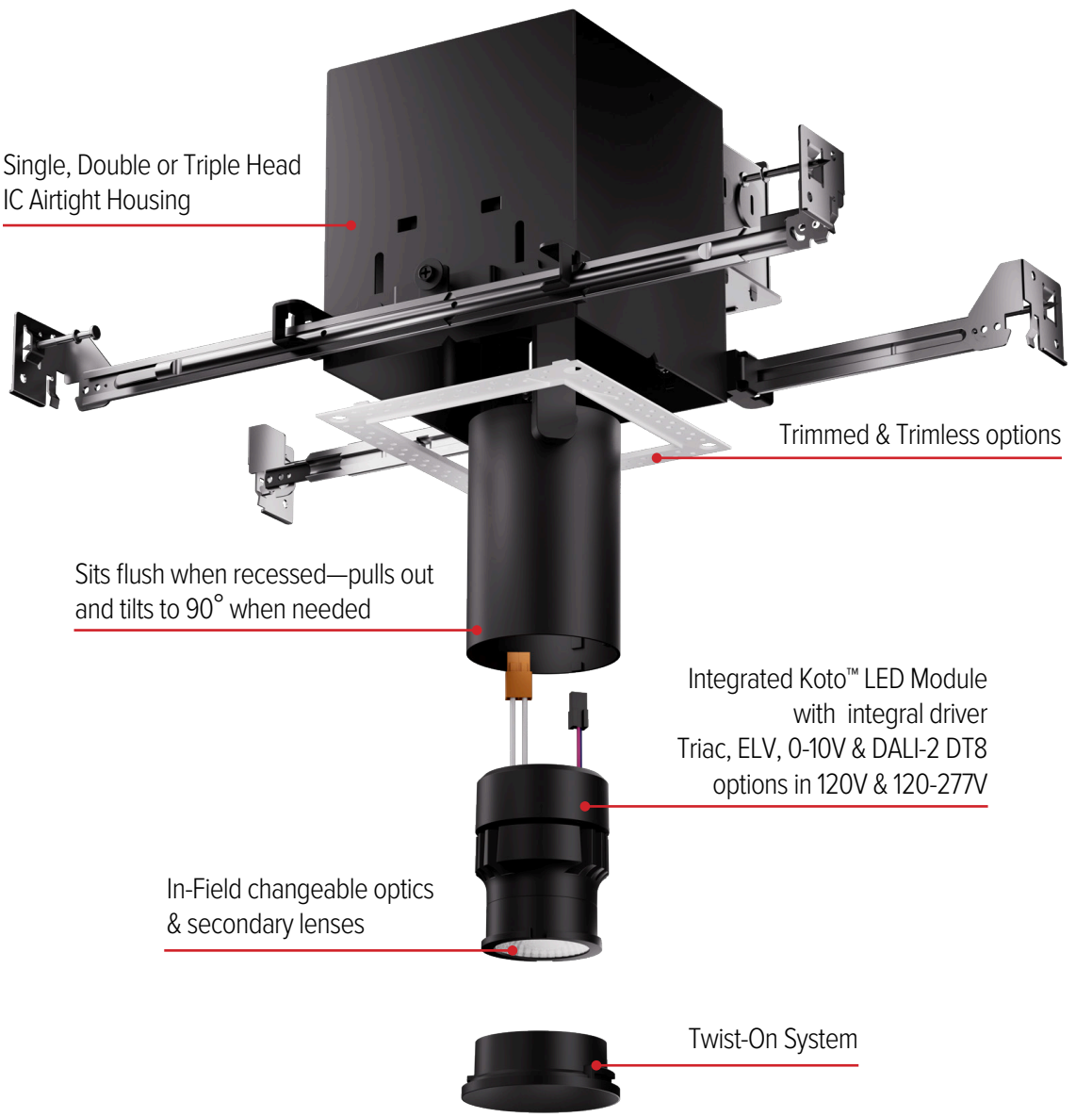

Designed to adapt to changing spaces, The Koto™ Peek Multiples combine the clean appearance of recessed lighting with the flexibility of adjustable cylinders.

Available in single, double, and triple-head configurations, each fixture can remain recessed for a minimalist look or be pulled down, rotated, and aimed exactly where light is needed.

Compatible with a wide range of Koto™ modules, Peek Multiples delivers a versatile architectural lighting solution for residential, hospitality, retail, and commercial environments.

Precision Where You Need It

Transforms from a clean recessed appearance to a fully adjustable directional fixture in seconds.

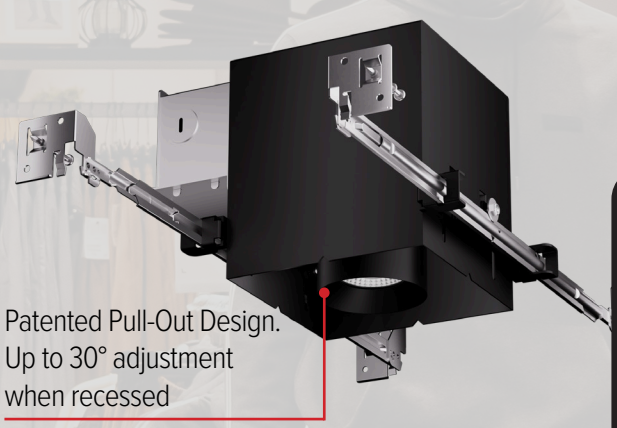

Patented Pull-Out Design.
Up to 30° adjustment
when recessed

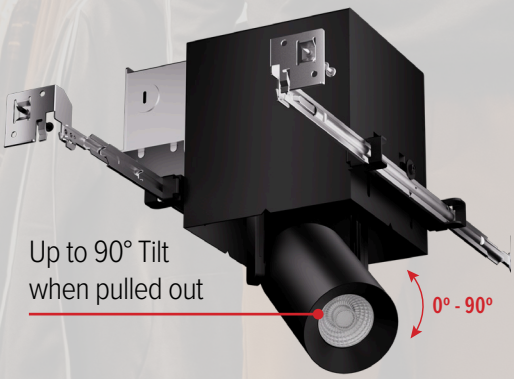

Up to 90° Tilt
when pulled out

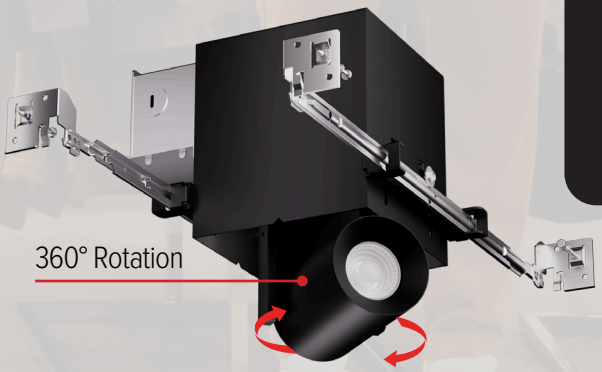

360° Rotation

Features

- Choose the ideal configuration for accent lighting, wall washing, retail displays, or hospitality applications.
- Accommodates varying ceiling thicknesses without removing the housing.
- In-field changeable optics.
- Up to 1,500 lumens per head.
- Available in 2400K, 3000K, 3500K, 4000K, CCT selectable, Tunable White (DALI-2), Sunset Dim to Warm, Human Centric Dim to Warm.

UP TO *1,500* LUMENS PER HEAD



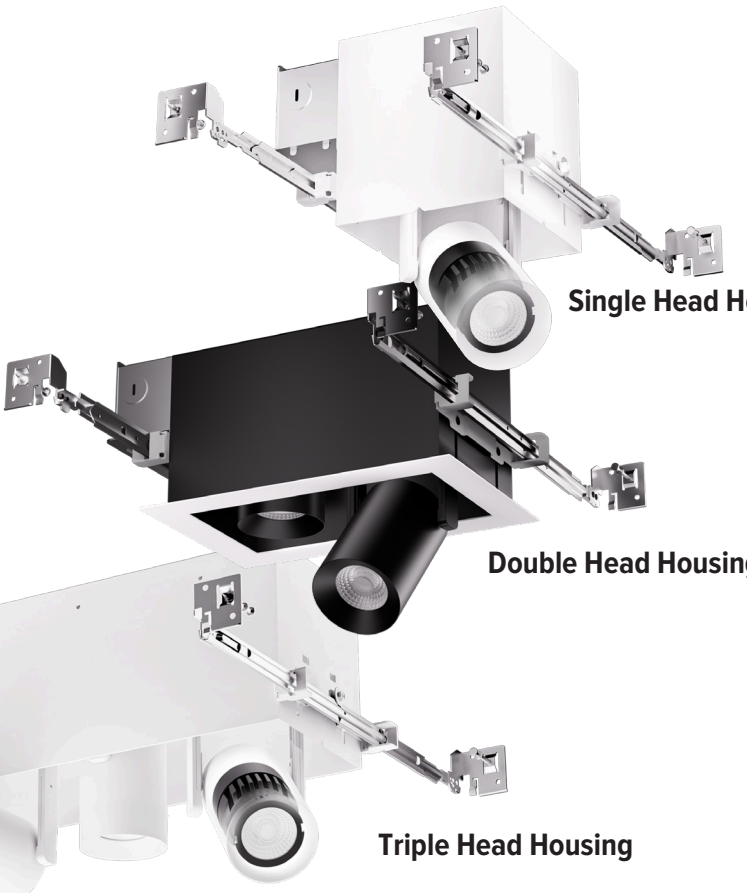

Single Head Housing

Double Head Housing

Triple Head Housing



OPTIONAL

DIMS TO WARM

SUNSET DIMMING TECHNOLOGY

- Triac, ELV, 0-10V, DALI-2 dimming options
- IC Rated for direct contact with insulation
- 120V and 120-277V input options
- In-Field changeable optics & secondary lenses
- 10°, 18°, 25°, 38°, 60°, 90°, and adjustable focus 18° to 50° beam angle options
- Available in 2400K, 3000K, 3500K, 4000K, CCT selectable, Tunable White (DALI-2 DT8), Sunset Dim to Warm & Human Centric Dim to Warm
- Available in 350, 750, 850, 950, 1050, 1150, 1350 & 1500 lumen packages per head

Secondary Lens Accessories



Spread Lens **(L47)**



Linear Lens **(L46)**



Frosted Diffuser **(L49)**



Color Shifter **(L51)**



Hex Louver **(L45** - Black) **(L57** - White)



Snoot **(L50W-** White) **(L50W-** Black)

Single Head

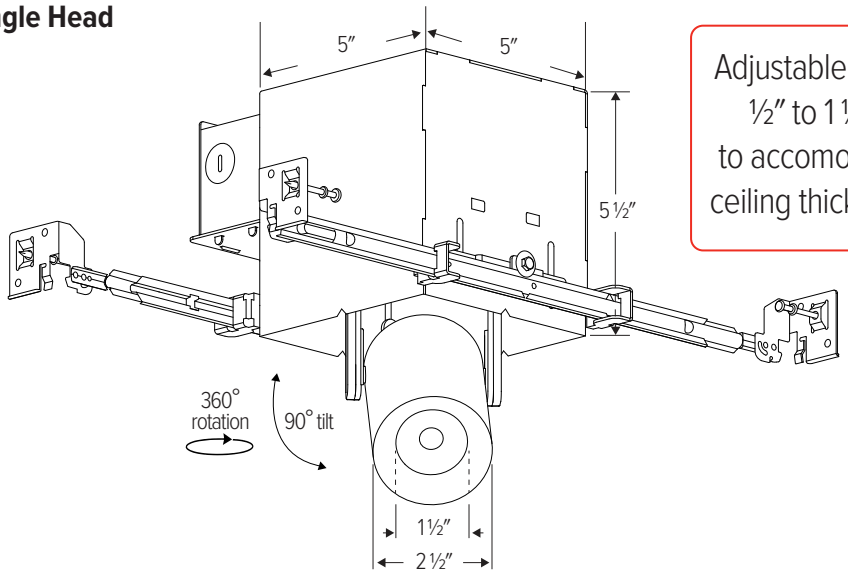

Adjustable from
½″ to 1½″
to accomodate
ceiling thickness

Double Head

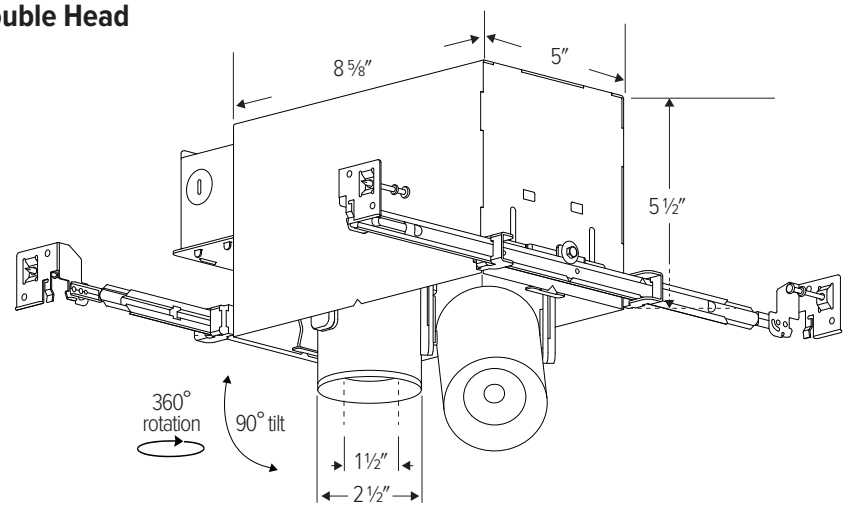

Triple Head

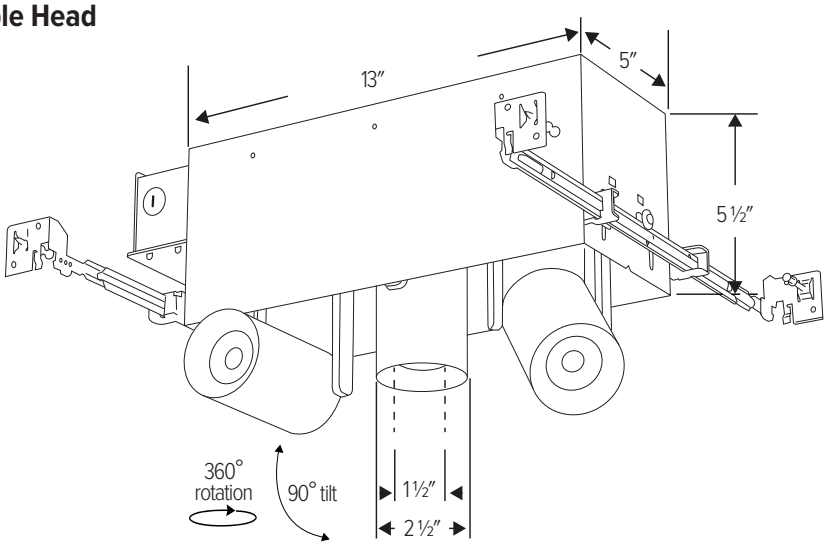

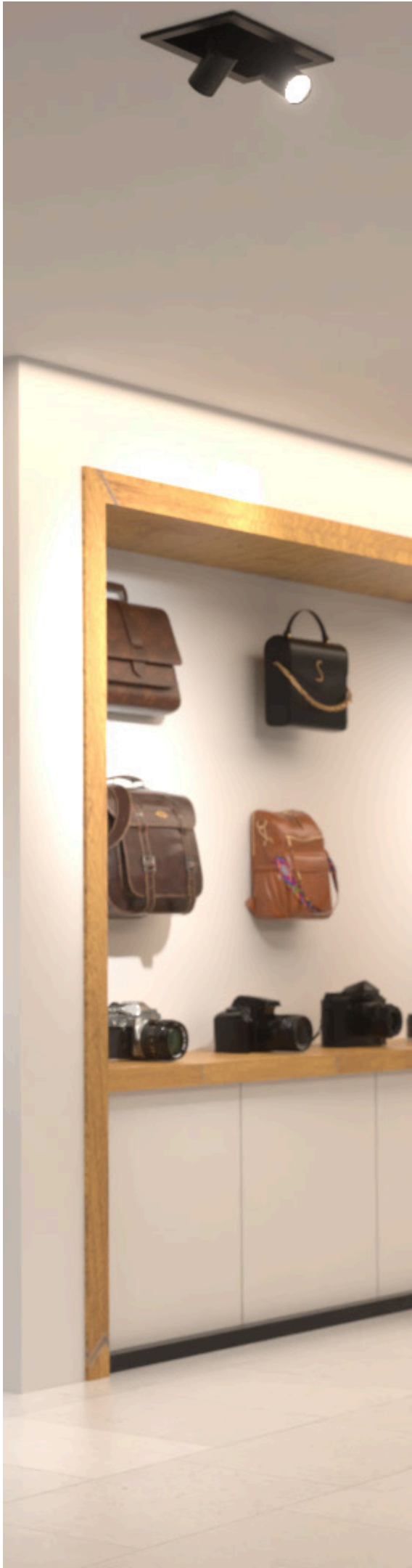

PRODUCT NUMBER BUILDER

KOTO™ PEEK MULTIPLES HOUSING WITH INTEGRATED KOTO™ MODULE

ELCO PEEK MULTIPLES	NUMBER OF HEADS	FINISH	LUMENS/WATTAGE PER HEAD	COLOR TEMP	DIMMING/ VOLTAGE	BEAM ANGLE
E2PM						
			120V Triac/ELV			
	A1 1 Head **B2** 2 Heads **C3** 3 Heads	**W** White Housing & Heads **BB** Black Housing & Heads	**-03**[1] 350 lm (5W) **-07** 750 lm (10.5W) **-09** 950 lm (10.5W) **-11** 1150 lm (12.5W) **-13** 1350 lm (12.5W) **-15** 1500 lm (14W)	**24** 2400K **27** 2700K **30** 3000K **35** 3500K **40** 4000K **SD**[2] Sunset **HC**[3] Human Centric	**(Blank)** 120V Triac/ELV	**(Blank)**[4] 38° **-S** 18° **-N** 25° **-W** 60° **-E**[5] 90° **-T**[6] 10°
			-08 850 lm (10.5W) **-10** 1050 lm (12.5W)	**CT5** CCT Switch: 2700K, 3000K, 3500K, 4000K, 5000K		
			[1] Available in 2700K & 3000K	[2] Sunset, Dim to Warm technology, dims from 3000K to 1800K. Available with 950 lm & 1150 lm only. [3] Human Centric, Dim to Warm technology, dims from 4000K to 2200K. Available with 1150 lm only.		[4] 38° installed on module with 25° & 60° included in the box. [5] 90° available with frosted reflector only. [6] 10° available with 2700K & 3000K in 350 lm & 750 lm only
			120V Triac/ELV Focus Beam			
			-07 750 lm (10.5W)	**27** 2700K **30** 3000K **35** 3500K **40** 4000K **SD**[2] Sunset	**(Blank)** 120V Triac/ELV	**-FC**[7] 18° - 50°
				[2] Sunset, Dim to Warm technology, dims from 3000K to 1800K.		[7] Adjustable Focus offers 18° to 50° with a twist of the snoot.
			120-277V Triac/ELV/0-10V			
			-10 1050 lm (12.5W)	**27** 2700K **30** 3000K **35** 3500K **40** 4000K **SD**[2] Sunset	**X** 120-277V, 0-10V, Triac & ELV (Dims to 1%)	**(Blank)**[4] 38° **-S** 18° **-N** 25° **-W** 60° **-E**[5] 90°
				[2] Sunset, Dim to Warm technology, dims from 3000K to 1800K.		[4] 38° installed on module with 25° & 60° included in the box. [5] 90° available with frosted reflector only.
			DALI-2 DT8 Tunable White			
			-08 850 lm (12.5W)	**41** Tunable White 4000K - 1800K	**A** 120-277V DALI 2 Tunable White (Dims to 0.1%)	**(Blank)**[4] 38° **-S** 18° **-N** 25° **-W** 60° **-E**[5] 90°
						[4] 38° installed on module with 25° & 60° included in the box [5] 90° available with frosted reflector only

TRIM & SPACKLE FRAME TRIMLESS

MULTIPLES TRIM	NUMBER OF HEADS	STYLE
E2M		
	1A 1 Head **2B** 2 Heads **3C** 3 Heads	**10W** White Trim **10BB** Black Trim **22SF** Spackle Frame Trimless

Single, Double, & Triple Head Trims



Single Head with Trim & Spackle Frame
White, Black or Trimless

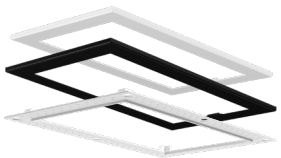

Double Head with Trim & Spackle Frame
White, Black or Trimless

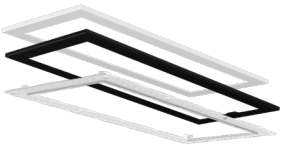

Triple Head with Trim & Spackle Frame
White, Black or Trimless

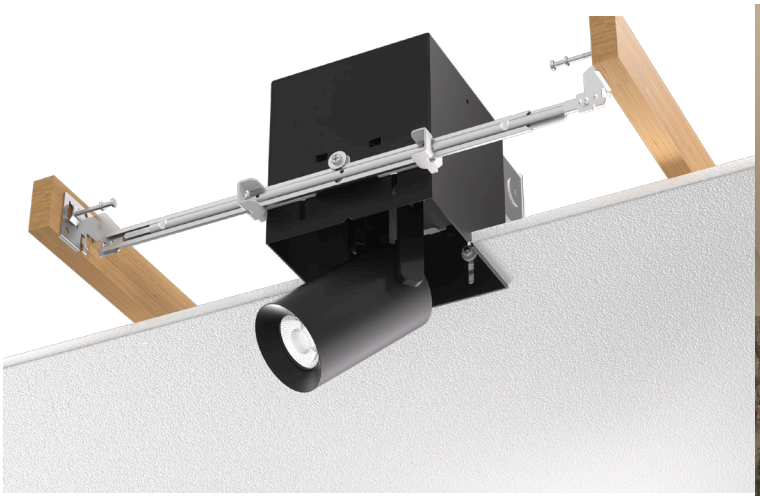



Precise Beam Angle Control

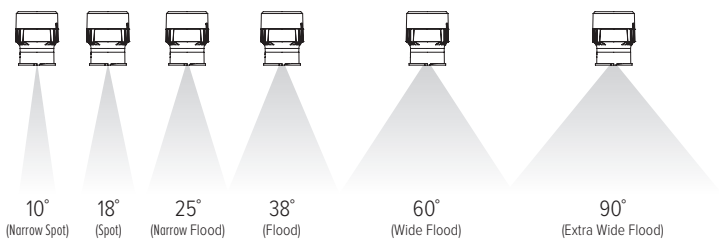

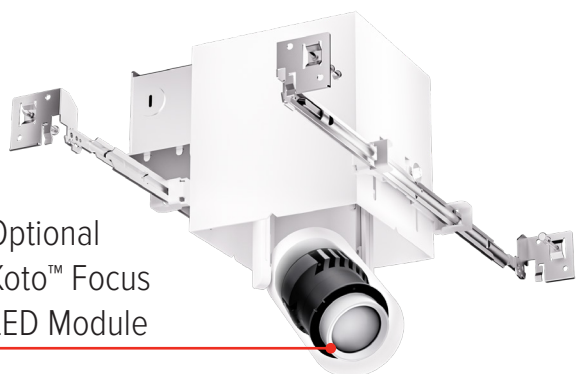

Optional
Koto™ Focus
LED Module

Field-Serviceable & Upgradable

LED Module



ELCAT1076





ELCO Lighting

Corporate Headquarters

2042 E. Vernon Ave.
Vernon, CA 90058
Tel: 323.231.2600
Fax: 323.231.3200
elcolighting.com

Customer Service

Tel: 800.522.2626
Fax: 800.644.2626
orderdesk@elcolighting.com
customerservice@elcolighting.com
sales@elcolighting.com

Printed in the U.S.A. 09/26
$8.00

© ELCO Lighting. The marks appearing in this catalog are registered trademarks of ELCO Lighting. Other marks used herein are recognized trademarks of their respective companies. Products shown in this brochure may be covered by U.S. and international patents. Specifications subject to change without notice.