ELCO Lighting

2042 E. Vernon Ave.
Vernon, CA 90058
www.elcolighting.com
Form #0433_09.26

The Koto™ Peek Multiples System

NEW!

SINGLE, DOUBLE & TRIPLE HEAD

Designed to adapt to changing spaces, The Koto™ Peek Multiples combine the clean appearance of recessed lighting with the flexibility of adjustable cylinders.

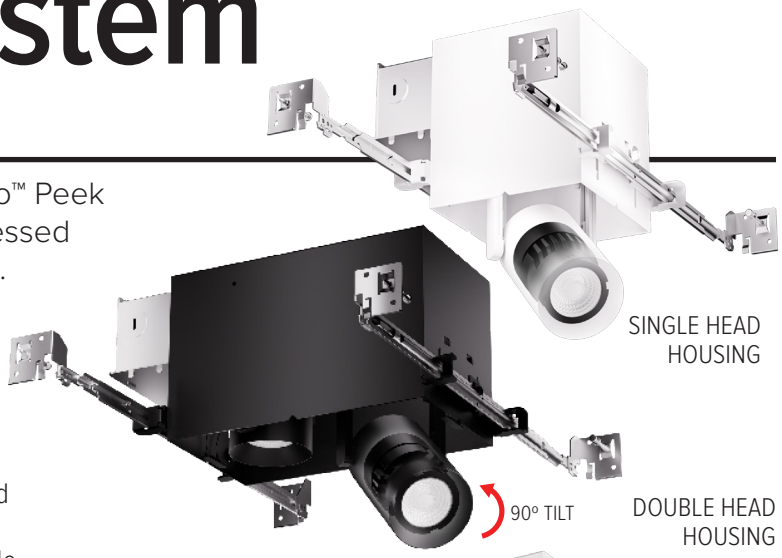



UP TO 1,500 LUMENS PER HEAD

- Triac, ELV, 0-10V, DALI-2 dimming options
- IC rated for direct contact with insulation
- 120V and 120-277V input options
- In Field changeable optics: 10°, 18°, 25°, 38°, 60°, 90°, and adjustable focus 18° to 50° beam angle options
- Available in 2400K, 3000K, 3500K, 4000K, CCT selectable, Tunable White (DALI-2 DT8), Sunset Dim to Warm, Human Centric Dim to Warm
- Available in 350, 750, 850, 950, 1050, 1150 , 1350 & 1500 lumen packages per head
- Accomodates ceiling thicknesses from ½" to 1 ½"

PRECISE BEAM ANGLE CONTROL

Adjustable beam angle 18° - 50° with a simple twist of the snoot is offered on our Koto Focus™ LED Modules. No need to switch lenses!

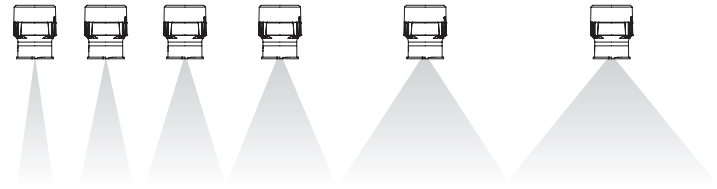

SINGLE, DOUBLE, & TRIPLE HEAD TRIMS



Single Head with Trim & Spackle Frame
White, Black or Trimless

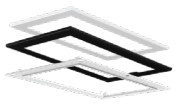

Double Head with Trim & Spackle Frame
White, Black or Trimless



Triple Head with Trim & Spackle Frame
White, Black or Trimless

FIELD-SERVICEABLE & UPGRADABLE LED MODULE



For a full list of compatible accessories please visit **elcolighting.com**

Follow us on Instagram @elcolighting

Subject to US tariffs. All other standards, terms and conditions apply.
Please provide your e-mail address to salesadmin@elcolighting.com. To unsubscribe e-mail: salesadmin@elcolighting.com

E-mail your order to: **orderdesk@elcolighting.com**
Tel: **800.522.2626** • Fax: **800.644.2626**

ELCO Lighting
Innovation Beyond Expectation