ELCO Lighting

2042 E. Vernon Ave.
Vernon, CA 90058
www.elcolighting.com
Form #0428_06.26



Introducing our **NEW**

KOTO™ Multiples

The Koto™ System Multiples is an innovative LED lighting solution designed for maximum flexibility and efficiency. Ideal for both commercial and residential applications, the system provides consistent, high-quality illumination while maintaining energy efficiency and a sleek, modern aesthetic.

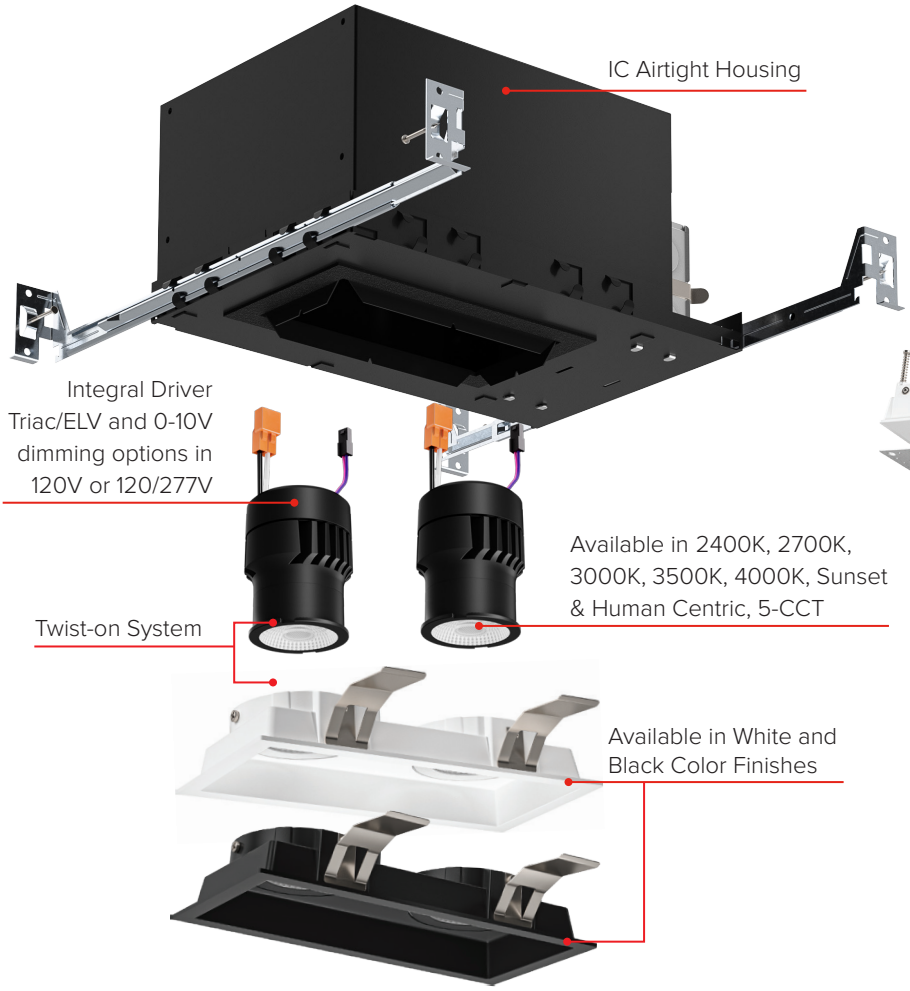

Koto™ Multiples Trims & Trimless

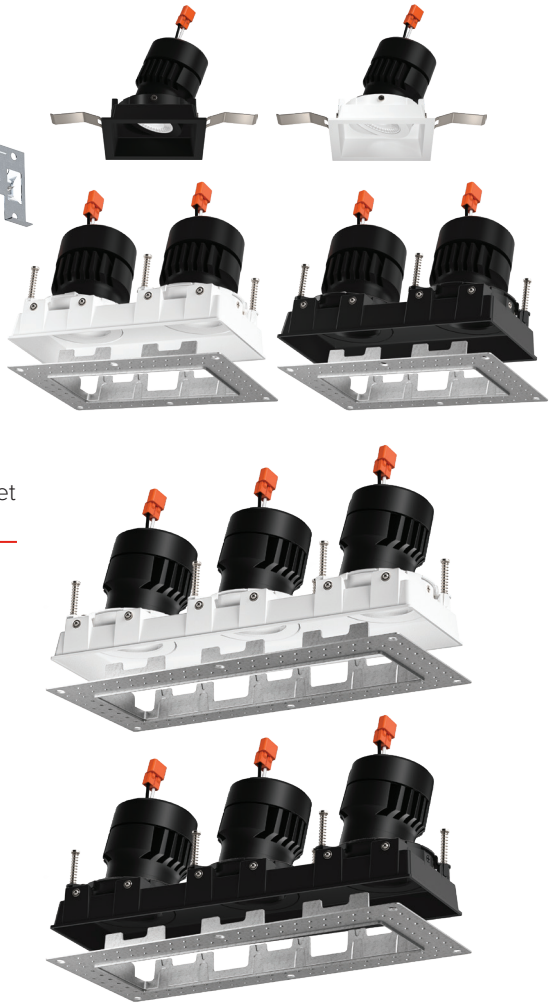

5YR 5 YEAR WARRANTY · 50K HRS 50,000 HOURS · 90+ CRI · DIMMABLE · INTEGRATED LED · TITLE 24 COMPLIANT · TWIST-ON · IC RATED

Subject to US tariffs. All other standards, terms and conditions apply.
Please provide your e-mail address to salesadmin@elcolighting.com. To unsubscribe e-mail: salesadmin@elcolighting.com

Follow us on Instagram @elcolighting

E-mail your order to: **orderdesk@elcolighting.com**
Tel: **800.522.2626** • Fax: **800.644.2626**

ELCO Lighting
Innovation Beyond Expectation

ELCO Lighting

2042 E. Vernon Ave.
Vernon, CA 90058
www.elcolighting.com
Form #0428_06.26

Standard Koto™ Features

- Lumen outputs from 350 lm - 1450 lm per head
- IC rated for direct contact with insulation
- Driver Built onto the module for ease of maintenance and installation
- 5.5″ Height Housing
- Color Temperatures 2400K, 2700K, 3000K, 3500K, 4000K, Sunset Dim to warm, Human Centric Dim to warm and 5-CCT Switch Options
- Beam angles options 10°, 18°, 28°, 38°, 60° and 90°
- New Construction, Flanged and Flangeless

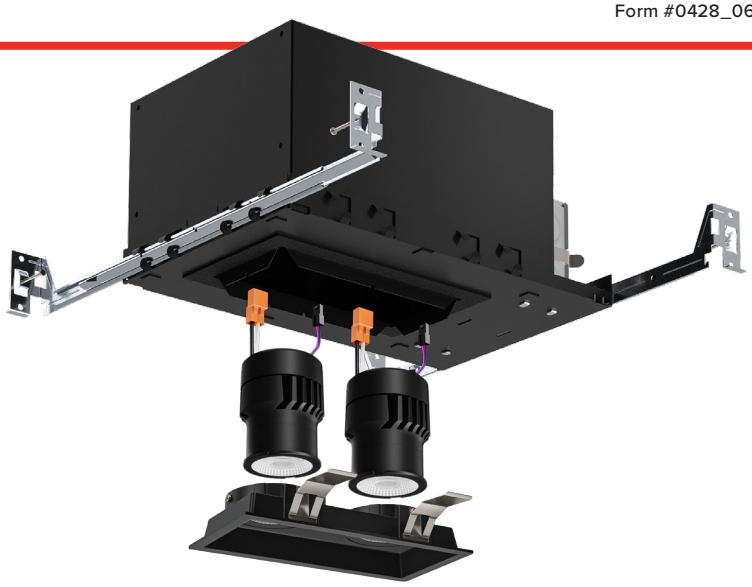

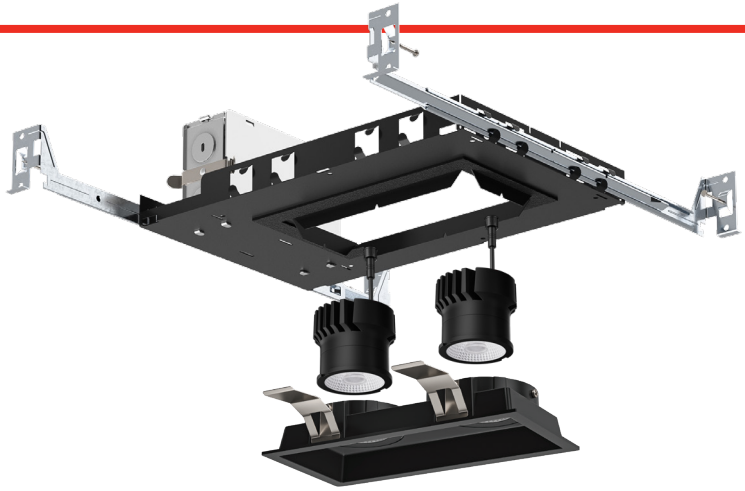

Canless Koto™ Features

- Lumen output ~950 lm per head
- IC rated for direct contact with insulation
- Driver Built onto the frame for shallow height
- Fits in 2″ X 4″ ceilings
- Color Temperatures 2700K, 3000K, 3500K, 4000K and Human Centric Dim to warm.
- Beam angles options 18°, 28°, 38°, 60° and 90°
- New Construction and Remodel, Flanged and Flangeless

Koto™ MAX Features

- Lumen output up to 3,500 lm per head
- IC rated up to 1500 lumens. Non-IC up to 3500 lumens
- Driver Built onto the frame for shallow height
- Fits in 2″ X 4″ ceilings
- Excellent color rendering 95+ CRI
- Beam angles options 18°, 28°, 38°, 60° and 90°
- New Construction and Remodel Flanged



Subject to US tariffs. All other standards, terms and conditions apply.
Please provide your e-mail address to salesadmin@elcolighting.com. To unsubscribe e-mail: salesadmin@elcolighting.com

Follow us on Instagram @elcolighting

E-mail your order to: **orderdesk@elcolighting.com**
Tel: **800.522.2626** • Fax: **800.644.2626**

ELCO Lighting
Innovation Beyond Expectation